20.Main Shaft Assembly

A: REMOVAL

1) Remove the manual transmission assembly from the vehicle. <Ref. to 6MT-34, REMOVAL, Manual Transmission Assembly.>
2) Prepare the transmission for overhaul. <Ref. to 6MT-39, Preparation for Overhaul.>
3) Remove the oil pipe, neutral position switch, back-up light switch and harness. <Ref. to 6MT-41, REMOVAL, Oil Pipe.> <Ref. to 6MT-43, REMOVAL, Neutral Position Switch.> <Ref. to 6MT-42, REMOVAL, Back-up Light Switch.>
4) Remove the extension case. <Ref. to 6MT-44, REMOVAL, Extension Case.>
5) Remove the transfer driven gear. <Ref. to 6MT-56, REMOVAL, Transfer Driven Gear.>
6) Remove the center differential. <Ref. to 6MT-58, REMOVAL, Center Differential.>
7) Remove the oil pump. <Ref. to 6MT-59, REMOVAL, Oil Pump.>
8) Remove the transmission case. <Ref. to 6MT-63, REMOVAL, Transmission Case.>
9) Remove the striking rod.
10) Use a screw driver to shift to the 4th gear position.

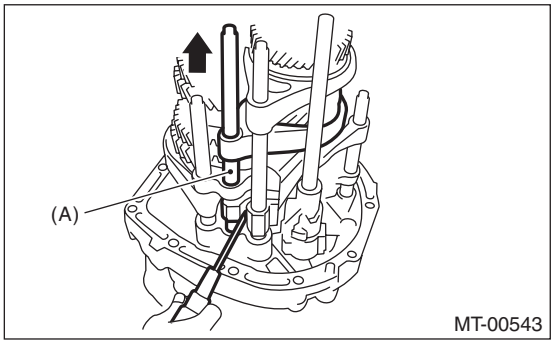

(A) 3rd-4th shift rod

11) Remove the reverse idler holder.

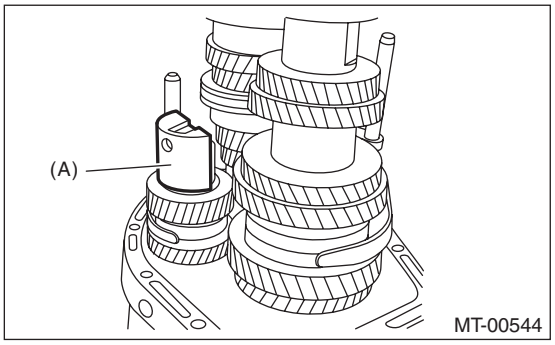

(A) Reverse idler holder

12) Remove the check plug, O-ring, check spring, plunger and check ball from the adapter plate.

NOTE:
Do not reuse the O-ring.

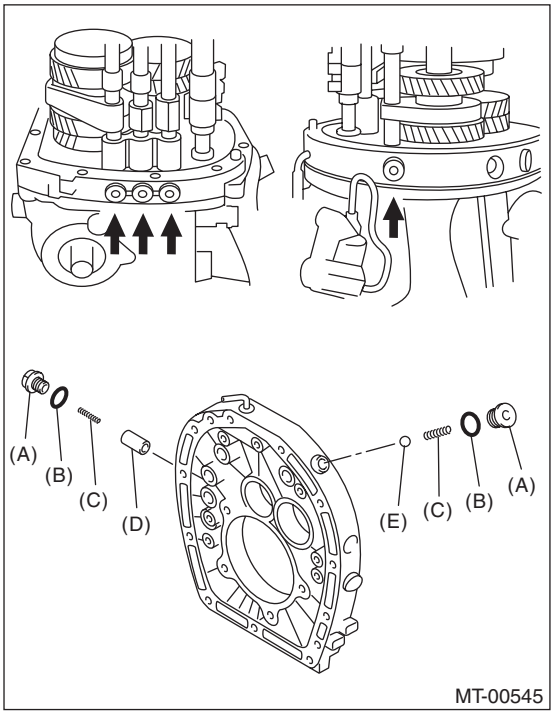

(A) Check plug
(B) O-ring
(C) Checking spring
(D) Plunger
(E) Check ball

13) Remove the bolt and gasket holding the reverse idler shaft.

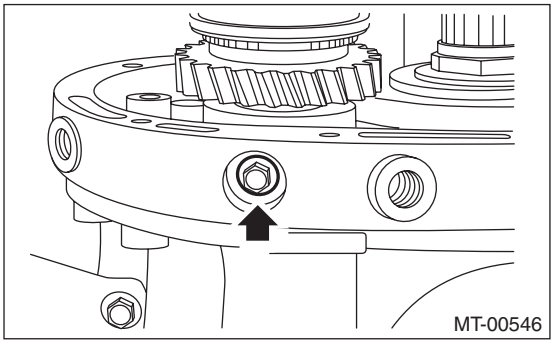

14) Push the main shaft assembly, driven gear assembly, reverse idler gear and shifter forks to remove from the adapter plate all at once.

NOTE:
This work requires an assistant.

B: INSTALLATION

1) Adjust the 3rd-4th and 5th-6th shifter fork rods. <Ref. to 6MT-113, ADJUSTMENT, Shifter Fork and Rod.>
2) Turn the sub gear counterclockwise for approximately 3 teeth. Match the sub gear and reverse idler gear holes, and insert the ST.
ST 18757AA000 STRAIGHT PIN REMOVER

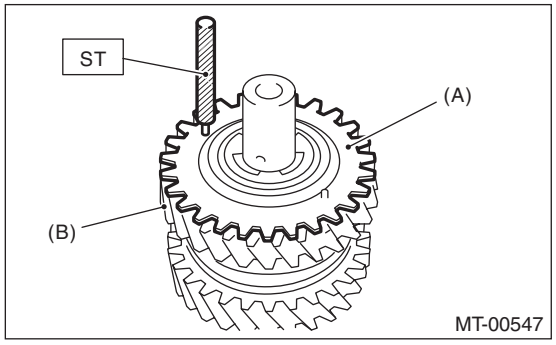

(A) Sub gear
(B) Reverse idler gear

3) Attach the driven gear assembly to the 1st-2nd shifter fork assembly.

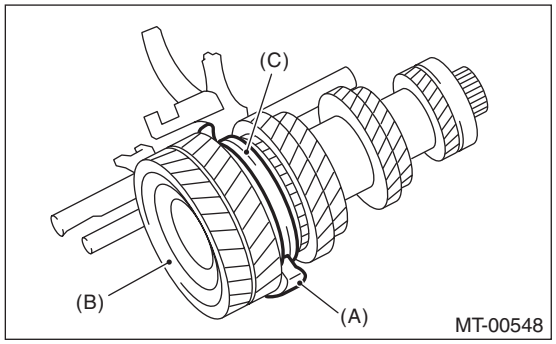

(A) 1st-2nd shifter fork
(B) Driven gear ASSY
(C) 1st-2nd sleeve

4) Attach the main shaft assembly to the 3rd-4th shifter fork, and assemble to the driven gear assembly.

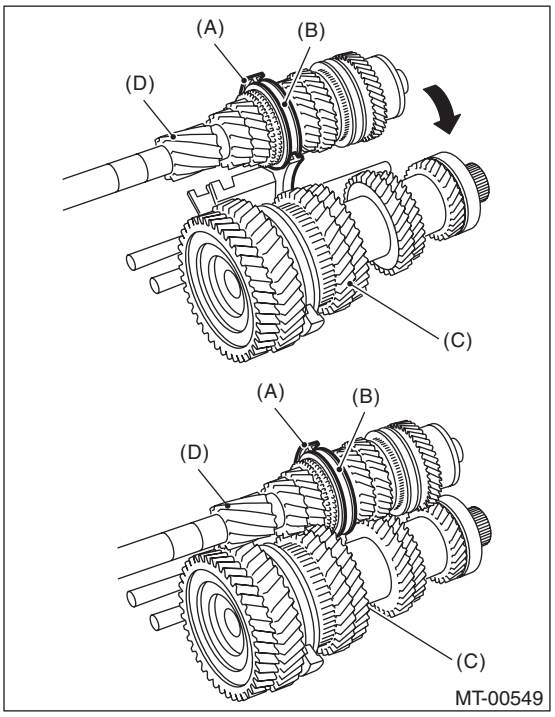

(A) 3rd-4th shifter fork
(B) 3rd-4th sleeve
(C) Driven gear ASSY
(D) Main shaft ASSY

5) Attach the 5th-6th shifter fork assembly to the main shaft assembly.

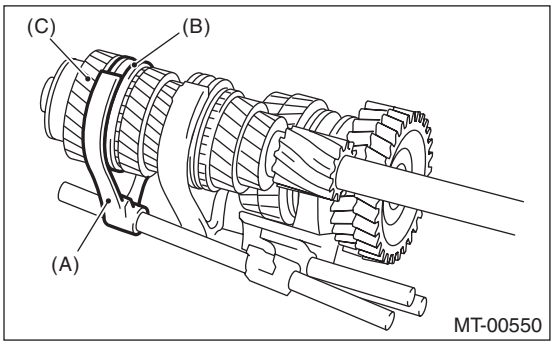

(A) 5th-6th shifter fork
(B) 5th-6th sleeve
(C) Main shaft ASSY

6) Attach the reverse shifter fork assembly to the reverse idler gear assembly.

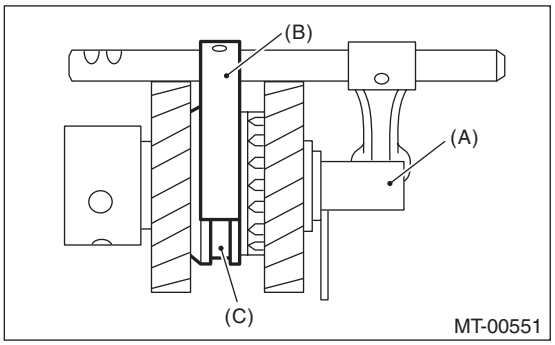

(A) Reverse idler gear ASSY
(B) Reverse shifter fork
(C) Reverse sleeve

7) Install the reverse idler gear assembly.

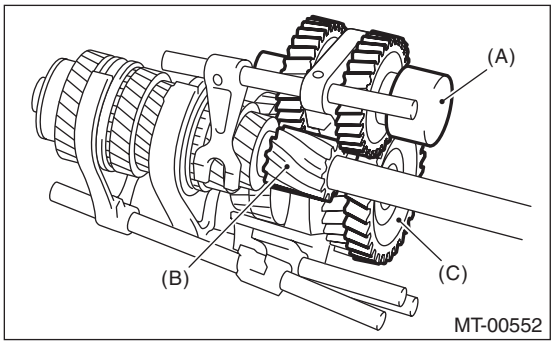

(A) Reverse idler gear ASSY
(B) 1st drive gear
(C) Reverse gear

8) Install the thrust bearing of the driven gear assembly.
9) Push on the shifter forks, main shaft assembly, driven gear assembly and reverse idler gear assemblies, to attach to the adapter plate all at once.

NOTE:
This work requires an assistant.

10) Install the plunger, check spring, new O-ring and check plugs.

Tightening torque:
25 N·m (2.5 kgf-m, 18.4 ft-lb)

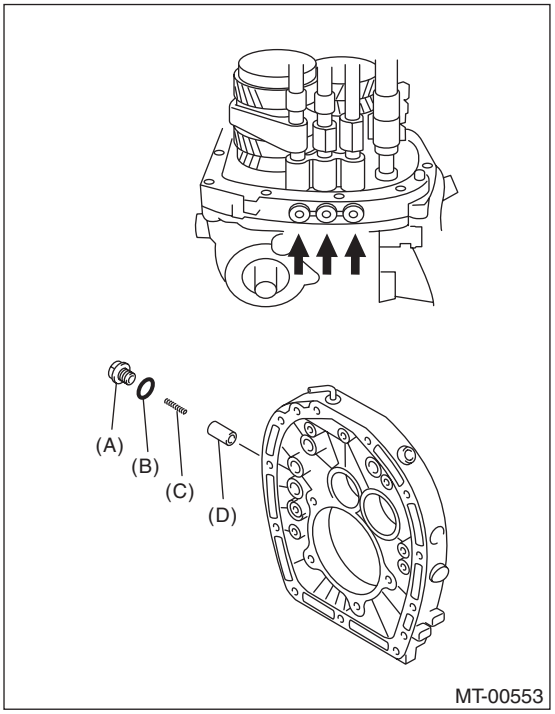

(A) Check plug
(B) O-ring
(C) Checking spring
(D) Plunger

11) Install the check ball, check spring, new O-ring and check plugs.

Tightening torque:
25 N·m (2.5 kgf-m, 18.4 ft-lb)

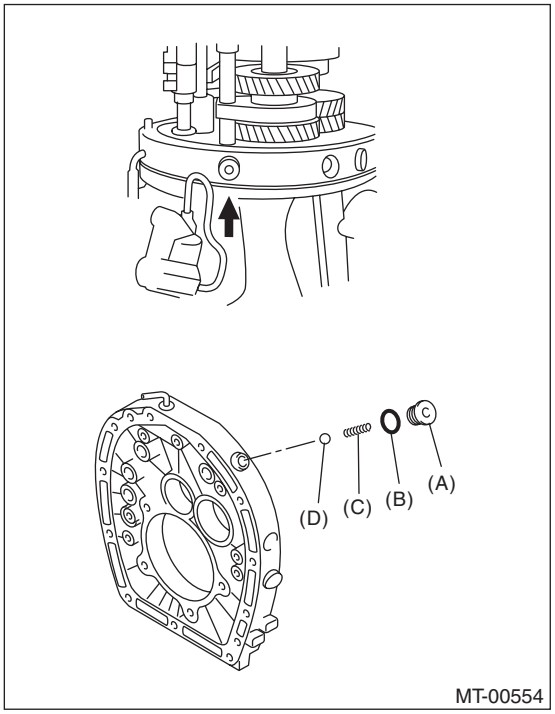

(A) Check plug
(B) O-ring
(C) Checking spring
(D) Check ball

12) Attach the bolt and a new gasket.

Tightening torque:
25 N·m (2.5 kgf-m, 18.1 ft-lb)

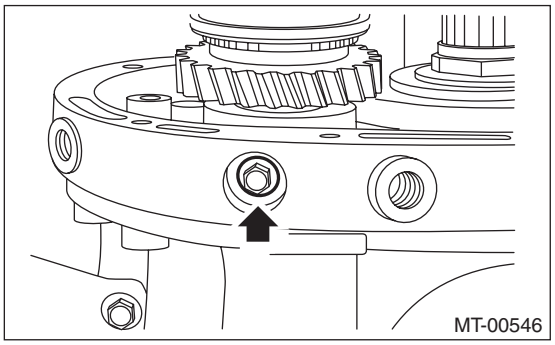

13) Use a screw driver to shift to the 4th gear position.

14) Install the reverse idler holder.

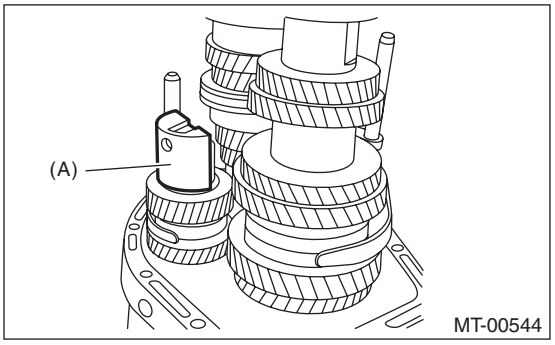

(A) Reverse idler holder

15) Install the striking rod.
16) Install the transmission case. <Ref. to 6MT-64, INSTALLATION, Transmission Case.>
17) Install the selected main shaft snap ring and washers.
18) Install the oil pump. <Ref. to 6MT-61, INSTALLATION, Oil Pump.>
19) Install the center differential. <Ref. to 6MT-58, INSTALLATION, Center Differential.>
20) Install the transfer driven gear. <Ref. to 6MT-56, INSTALLATION, Transfer Driven Gear.>
21) Install the extension case. <Ref. to 6MT-44, INSTALLATION, Extension Case.>
22) Install the oil pipe, neutral position switch, back-up light switch and harness. <Ref. to 6MT-41, INSTALLATION, Oil Pipe.> <Ref. to 6MT-43, INSTALLATION, Neutral Position Switch.> <Ref. to 6MT-42, INSTALLATION, Back-up Light Switch.>
23) Install the manual transmission assembly to the vehicle. <Ref. to 6MT-36, INSTALLATION, Manual Transmission Assembly.>

C: DISASSEMBLY

NOTE:
Individual sleeves and hubs meet at a specified position. Before disassembly, mark the meeting position of the sleeve and hub.
1) Affix the ST to the work table.
ST 18664AA000 BASE
2) Flatten the nut tab.

3) Set the main shaft assembly to the ST, and remove the lock nut and washer.
ST1 18665AA000 HOLDER
ST2 18664AA000 BASE

NOTE:
Use a 38 mm socket wrench.

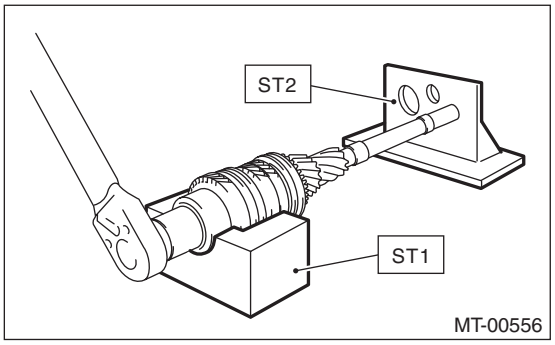

4) Remove the main shaft assembly from the ST.
5) Set the ST1 to the 6th drive gear, and use a press to remove the taper roller bearing, bushing and 6th drive gear.
ST1 18722AA010 REMOVER
ST2 899864100 REMOVER

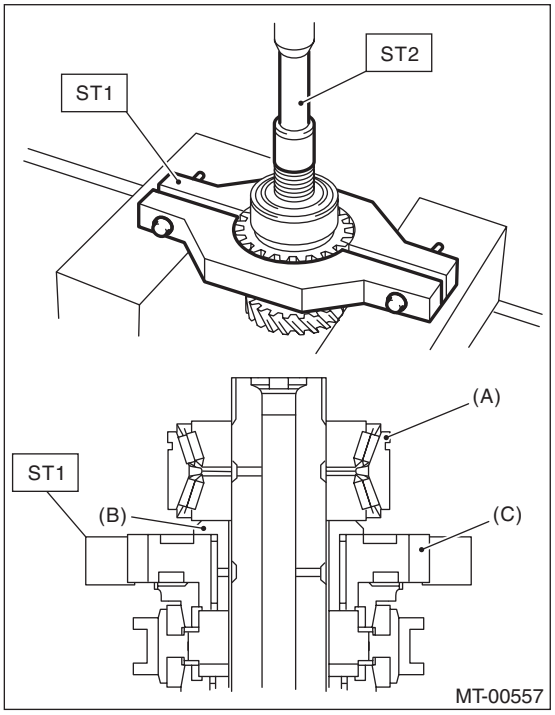

(A) Taper roller bearing
(B) Bushing
(C) 6th drive gear

6) Remove the 5th-6th sleeve, 6th needle bearing and 6th baulk ring.

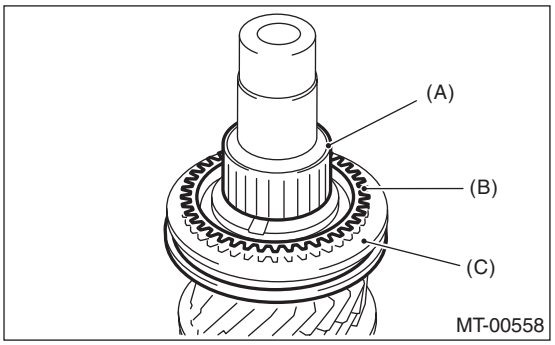

(A) Needle bearing
(B) 6th baulk ring
(C) 5th-6th sleeve

7) Set the ST to the 3rd drive gear, and use a press to remove individual parts.
ST 18720AA000 REMOVER

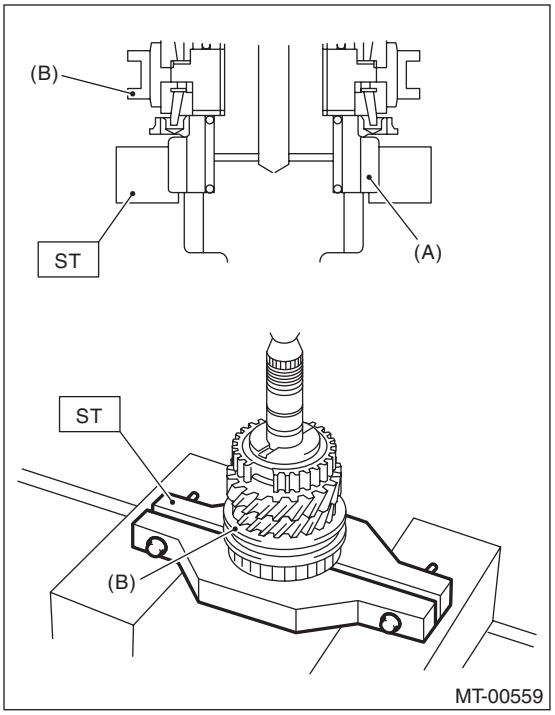

(A) 3rd drive gear
(B) 3rd-4th sleeve

D: ASSEMBLY

NOTE:
Replace the following parts as a set.
- Sleeve and hub
- Outer baulk ring, 3rd synchro cone and inner baulk ring
- Taper roller bearing

1) Apply adequate gear oil to the main shaft, 3rd needle bearing and 3rd drive gear inner surface.

2) Install the 3rd needle bearing and 3rd drive gear to the main shaft.

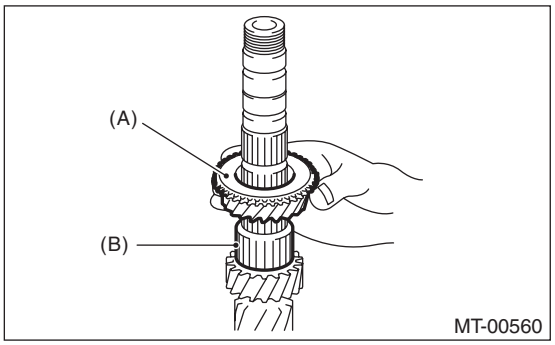

(A) 3rd needle bearing
(B) 3rd drive gear

3) Install the inner baulk ring, 3rd synchro cone and outer baulk ring.

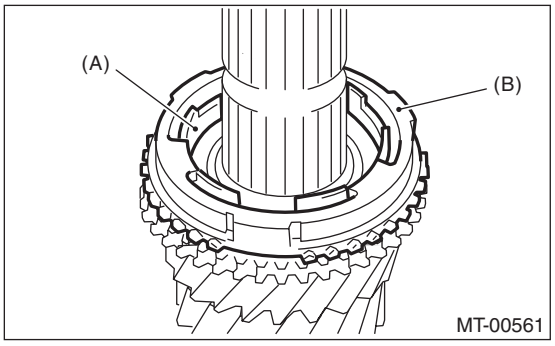

(A) Inner baulk ring
(B) Outer baulk ring

NOTE:
Install the 3rd synchro cone by aligning the protrusion of the 3rd synchro cone with the hole on the 3rd drive gear.

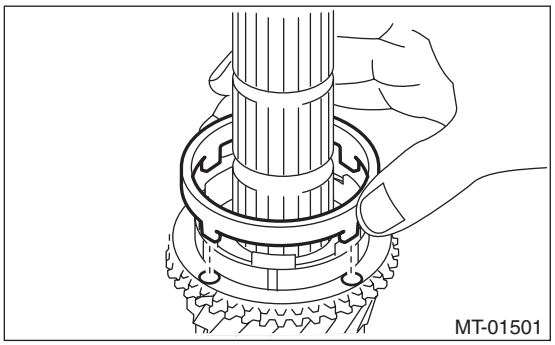

4) Install the 3rd-4th hub and 4th bushing.
(1) Being careful of the install direction of the 3rd-4th hub, set to the main shaft.

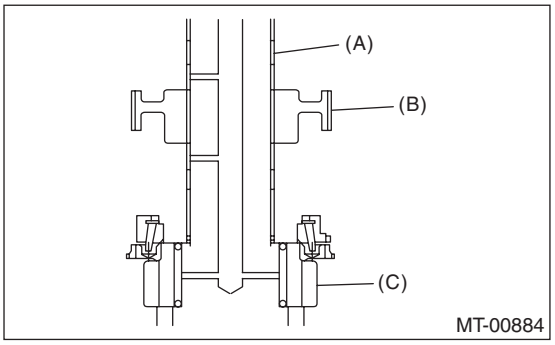

(A) Main shaft
(B) 3rd-4th hub
(C) 3rd drive gear

(2) Being careful not to cover the oil holes of the main shaft and 4th bushing, attach to the main shaft.

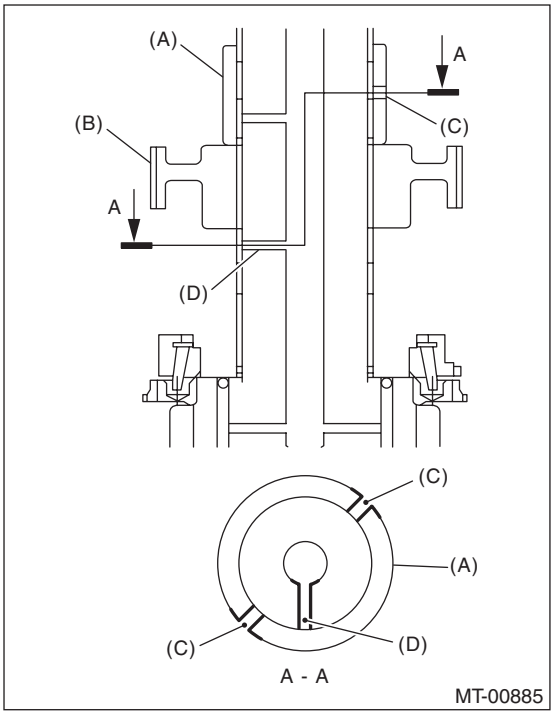

(A) 4th bushing
(B) 3rd-4th hub
(C) 4th bushing oil hole
(D) Main shaft oil hole

(3) Using the ST, push in to the 3rd-4th hub and 4th bushing all at once.

ST1 18651AA000 INSTALLER
ST2 398177700 INSTALLER

CAUTION:
Do not apply pressure in excess of 40 kN (4.0 ton, 4.4 US ton, 3.9 Imp ton).

NOTE:
When pushing into the 3rd-4th hub and 4th bushing, move the outer baulk ring to match the protrusion of the outer baulk ring and the cut out on the 3rd-4th bushing.

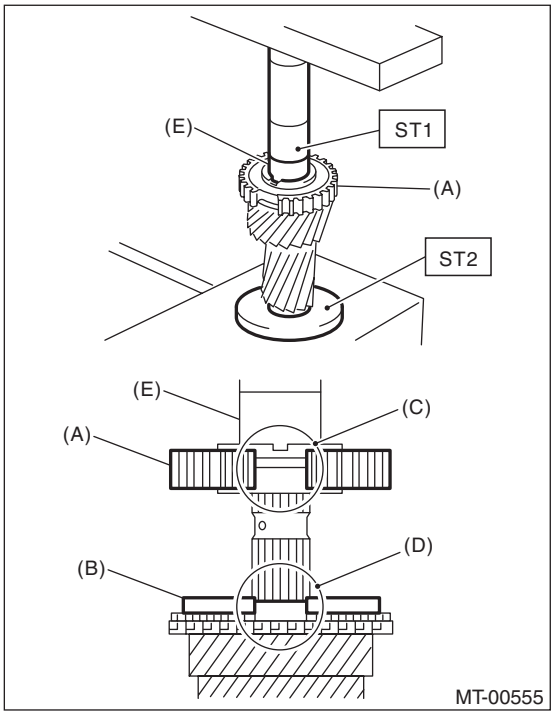

(A) 3rd-4th hub
(B) Outer baulk ring
(C) Cut out on the 3rd-4th hub
(D) Protrusion of the outer baulk ring
(E) 4th bushing

5) Make sure that the 3rd drive gear can be turned smoothly by hand. If it does not turn smoothly, reassemble.

6) Attach the 3rd-4th shifting insert key at the appropriate position of the 3rd-4th sleeve.

NOTE:
The angle of each shifting insert key is 120°.

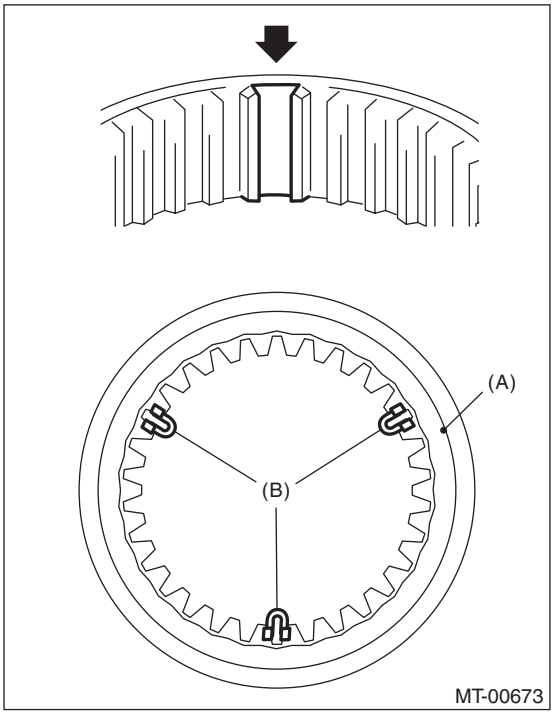

(A) 3rd-4th sleeve
(B) 3rd-4th shifting insert key

7) Attach the 3rd-4th sleeve to the 3rd-4th hub.

NOTE:
- There is an identification groove on the 3rd-4th sleeve.
- Place the groove towards the 3rd drive gear, and attach the 3rd-4th sleeve.

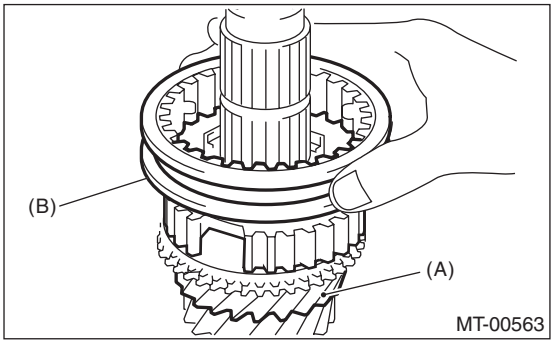

(A) 3rd drive gear
(B) 3rd-4th sleeve identification groove (1 groove)

8) Install the 4th baulk ring.

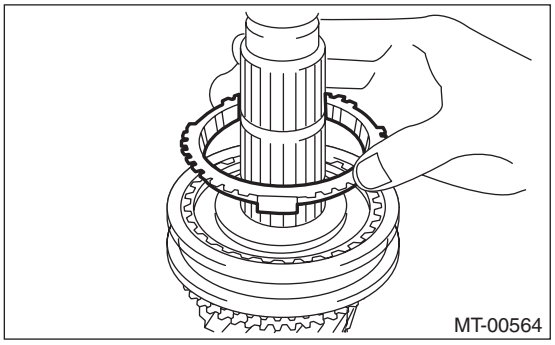

9) Apply adequate gear oil to the main shaft, 4th needle bearing and 4th drive gear inner surface.

10) Install the 4th needle bearing and 4th drive gear.

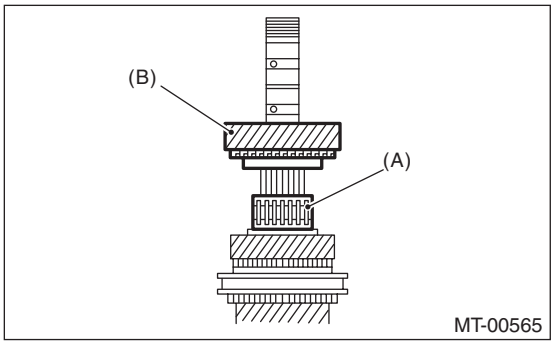

(A) 4th needle bearing
(B) 4th drive gear

11) Install the 5th bushing.

(1) Being careful not to cover the oil holes of the main shaft and 5th bushing, attach to the main shaft.

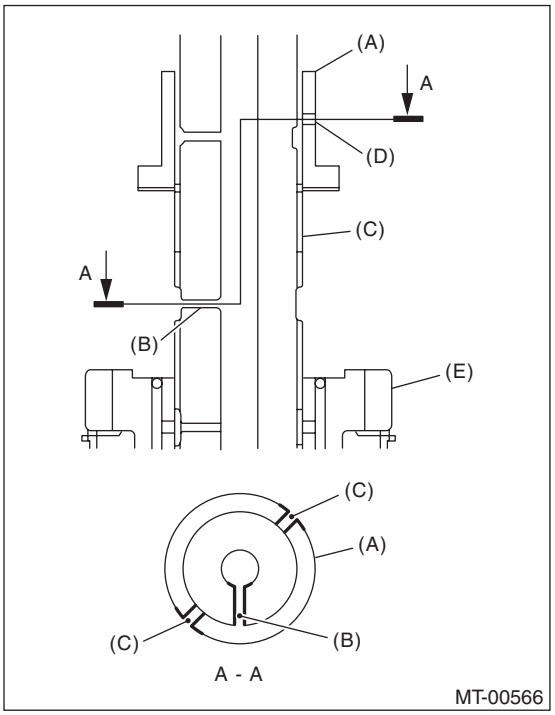

(A) 5th bushing
(B) Main shaft oil hole
(C) Main shaft
(D) 5th bushing oil hole
(E) 4th drive gear

(2) Using the ST, push into the 5th bushing.

ST1 18651AA000 INSTALLER
ST2 398177700 INSTALLER

CAUTION:
Do not apply pressure in excess of 40 kN (4.0 ton, 4.4 US ton, 3.9 Imp ton).

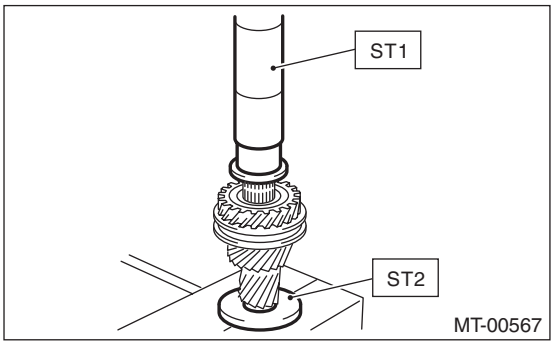

12) Make sure that the 4th drive gear can be turned smoothly by hand. If it does not turn smoothly, re-assemble.

13) Apply adequate gear oil to the main shaft, 5th needle bearing and 5th drive gear inner surface.

14) Install the 5th needle bearing and 5th drive gear.

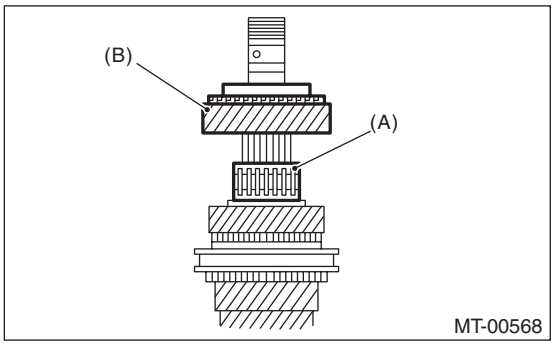

(A) 5th needle bearing
(B) 5th drive gear

15) Install the 5th baulk ring.

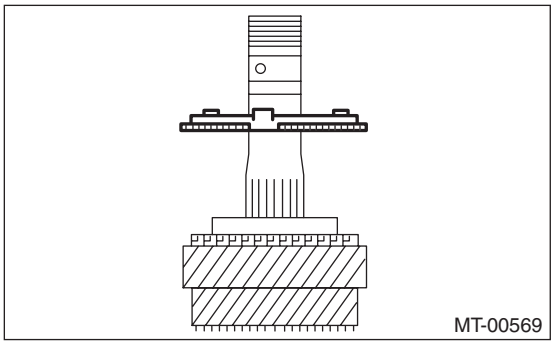

16) Install the 5th-6th hub.
(1) Being careful of the install direction of the 5th-6th hub, set to the main shaft.

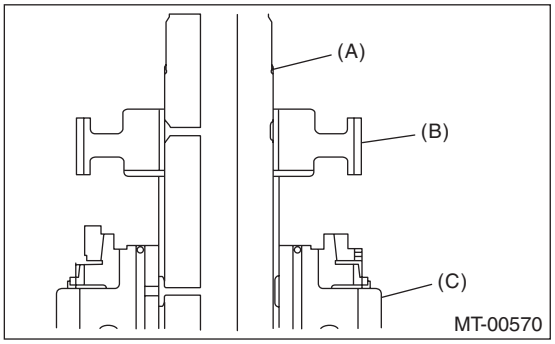

(A) Main shaft
(B) 5th-6th hub
(C) 5th drive gear

(2) Using the ST, push into the 5th-6th hub.
ST1 18651AA000 INSTALLER
ST2 398177700 INSTALLER

CAUTION:
Do not apply pressure in excess of 40 kN (4.0 ton, 4.4 US ton, 3.9 Imp ton).

NOTE:
When pushing into the 5th-6th hub, move the outer baulk ring to match the protrusion of the outer baulk ring and the cut out on the 5th-6th bushing.

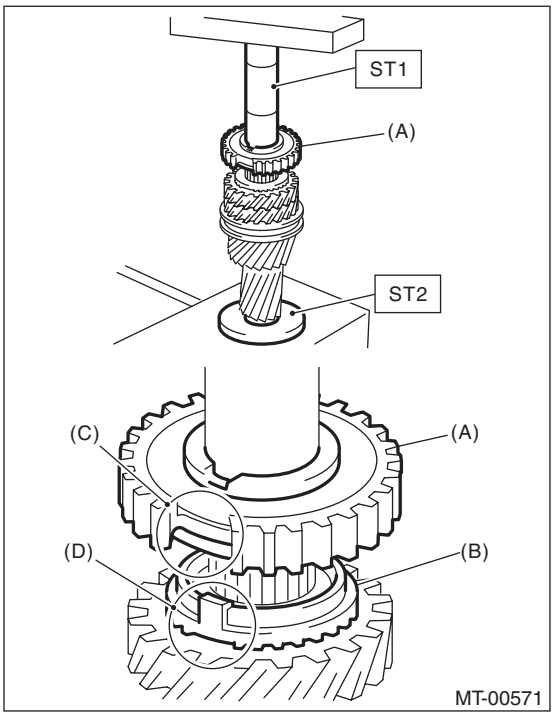

(A) 5th-6th hub
(B) Outer baulk ring
(C) Cut out on the 5th-6th hub
(D) Protrusion of the outer baulk ring

17) Make sure that the 5th drive gear can be turned smoothly by hand. If it does not turn smoothly, re-assemble.

18) Attach the 5th-6th shifting insert key at the appropriate position of the 5th-6th sleeve.

NOTE:
The angle of each shifting insert key is 120°.

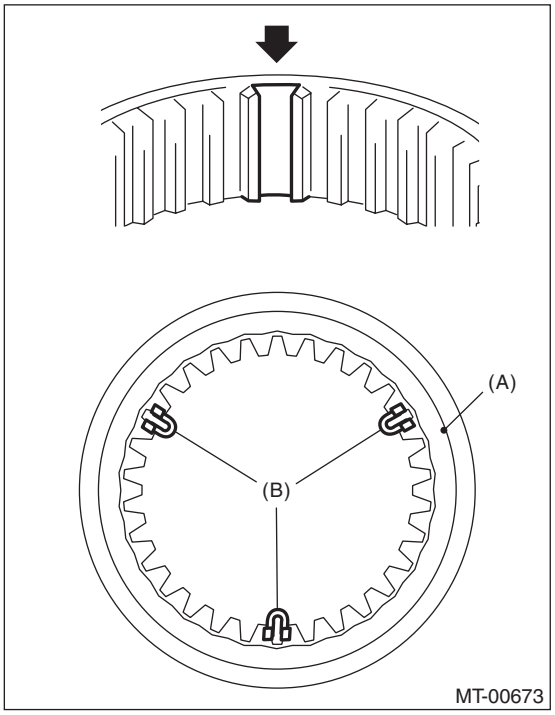

(A) 5th-6th sleeve
(B) Shifting insert key

19) Attach the 5th-6th sleeve to the 5th-6th hub.

NOTE:
• There are two identification grooves on the 5th-6th sleeve.
• Place the grooves towards the 5th drive gear, and attach the 5th-6th sleeve.

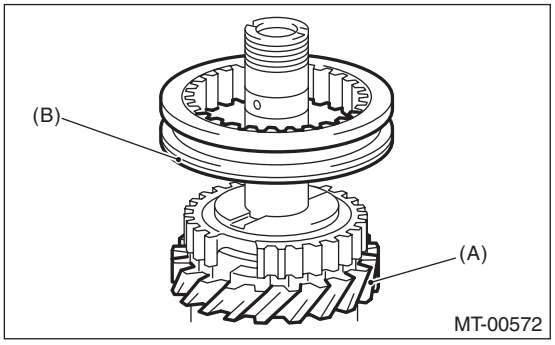

(A) 5th drive gear
(B) 5th-6th sleeve identification groove (2 grooves)

20) Install the 6th baulk ring.

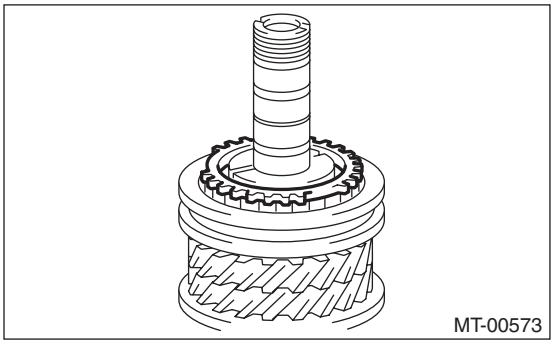

21) Apply adequate gear oil to the main shaft, 6th needle bearing and 6th drive gear inner surface.
22) Install the 6th drive gear.

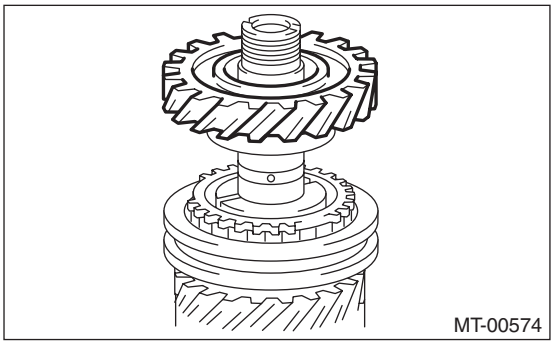

23) Install the 6th needle bearing.

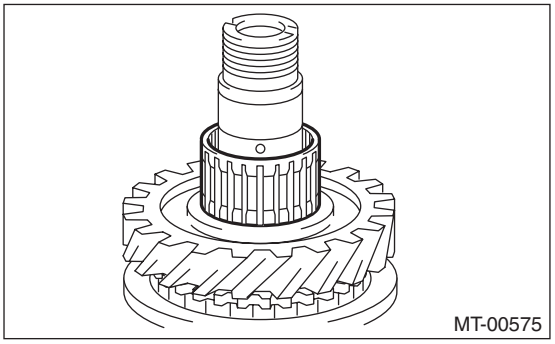

24) Being careful not to cover the oil holes of the 6th bushing and the main shaft, set the 6th bushing to the main shaft.

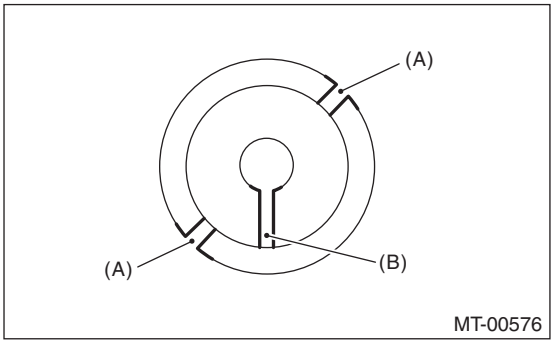

(A) 6th bushing oil hole
(B) Main shaft oil hole

25) Using the ST, install the 6th bushing.
ST1 18651AA000 INSTALLER
ST2 398177700 INSTALLER

CAUTION:
Do not apply pressure in excess of 40 kN (4.0 ton, 4.4 US ton, 3.9 Imp ton).

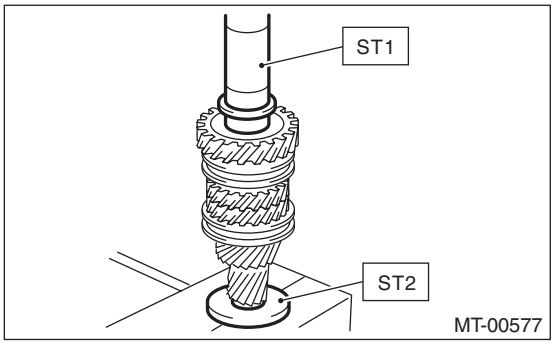

26) Make sure that the 6th drive gear can be turned smoothly by hand. If it does not turn smoothly, reassemble.
27) Using the ST, install the inner race of the inner bearing.
ST1 18651AA000 INSTALLER
ST2 398177700 INSTALLER

CAUTION:
Do not apply pressure in excess of 40 kN (4.0 ton, 4.4 US ton, 3.9 Imp ton).

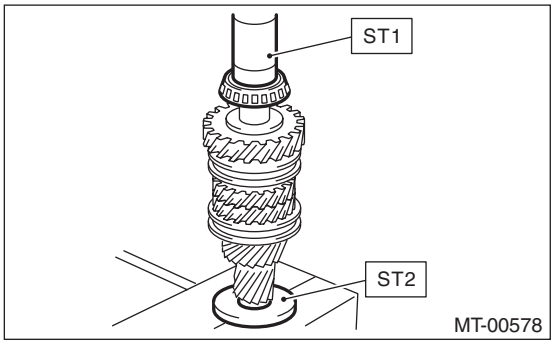

28) Using the ST, install the retainer and inner race of the outer bearing.
ST1 18651AA000 INSTALLER
ST2 398177700 INSTALLER

CAUTION:
Do not apply pressure in excess of 40 kN (4.0 ton, 4.4 US ton, 3.9 Imp ton).

NOTE:
- Confirm that the retainer is installed in the proper direction.
- Push in until there is no backlash on the retainer, or the bearing turns smoothly by hand.

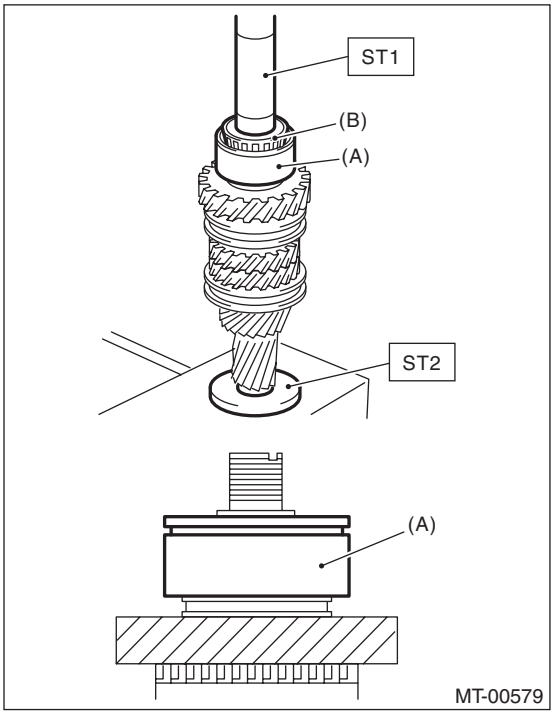

(A) Retainer
(B) Outer bearing inner race

29) Make sure that the taper roller bearing turns smoothly by hand. If it does not rotate smoothly, replace the taper roller bearing as a set, and reassemble.
30) Attach the lock washer and a new lock nut.
31) Set the main shaft assembly to the ST, and tighten the lock nut.
ST1 18665AA000 HOLDER
ST2 18664AA000 BASE

Tightening torque:
392 N·m (40.0 kgf-m, 289 ft-lb)

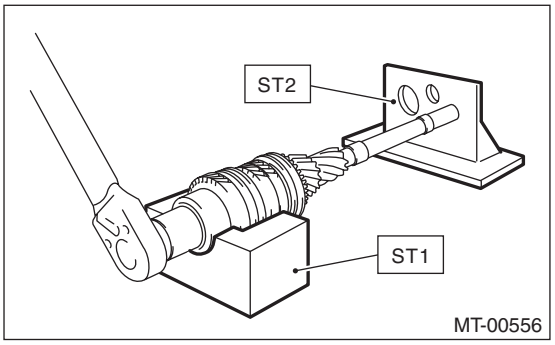

32) Using the ST, crimp the lock nut in 4 locations, with dimensions within A 27±0.3 mm (1.06±0.01 in).
ST 18668AA000 PUNCH

NOTE:
Do not damage the crimp area of the lock nut.

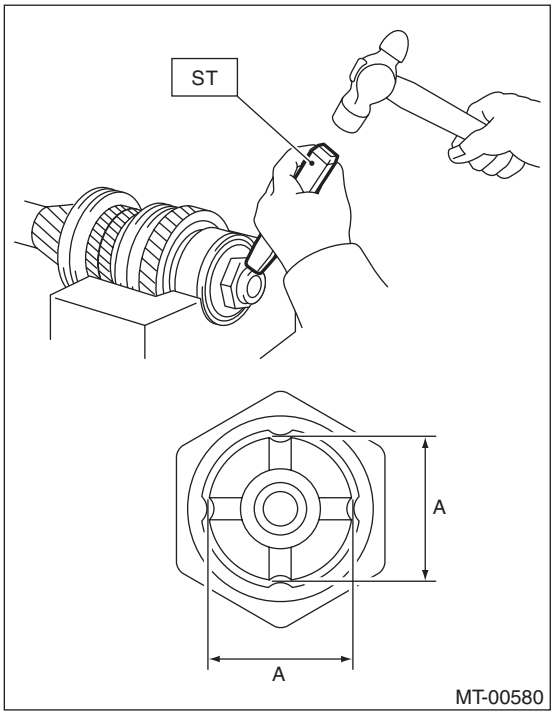

E: INSPECTION

Disassembled parts should be washed with water first and then inspected carefully.
1) Bearing
Replace the bearings in the following cases.
- Bearing wear, rusting or damage
- If the bearing does not rotate smoothly or an abnormal noise is emitted when turning.
- When the bearing has other defects

2) Bushing (each gear)
Replace the bushing in following cases.
- When gear sliding surfaces are damaged or excessively worn.

3) Gear
Replace gears in the following cases.
- When gear teeth are damaged or excessively worn.
- If the contact area of the baulk ring is damaged.
- If the inner face of the gear is worn.

4) Baulk ring, synchro cone
Replace the baulk ring and synchro cone in following cases:
- Baulk ring wear, rusting or damage

5) Shifting insert key
Replace the shifting insert key if deformed, excessively worn or defective in any way.

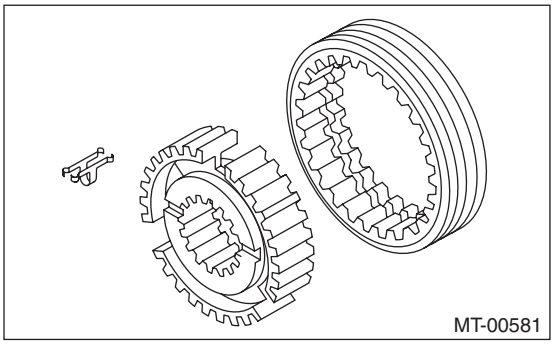

F: ADJUSTMENT

1. MAIN SHAFT SNAP RING & WASHER SELECTION

NOTE:
In the following conditions, perform the procedures below.
- 1st to 6th driven gear replacement
- 1st and 2nd synchro ring assembly replacement
- Ball bearing replacement
- Adapter plate replacement
- Driven shaft replacement

1) Insert the drive pinion assembly into the adapter plate.

NOTE:
Confirm that the thrust bearing outer race has not been removed and the drive pinion is not lifted.
2) Set the height gauge to the adapter plate. Lower the height gauge indicator to the mating surface of the adapter plate and case, and set to zero points.
ST 18853AA000 HEIGHT GAUGE

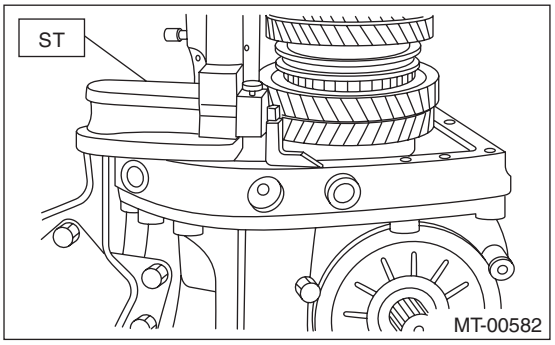

NOTE:
• The adapter plate will be the base point for the measurement. Use a scraper to remove any gasket material remaining on the end face.
• During measurement, do not place the height gauge in the shaded area shown in the figure.

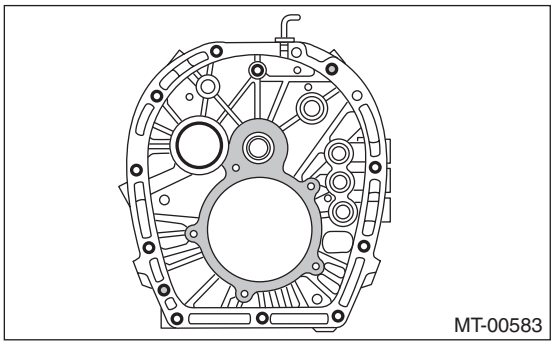

3) Measure the height to the ball bearing end face (height H).

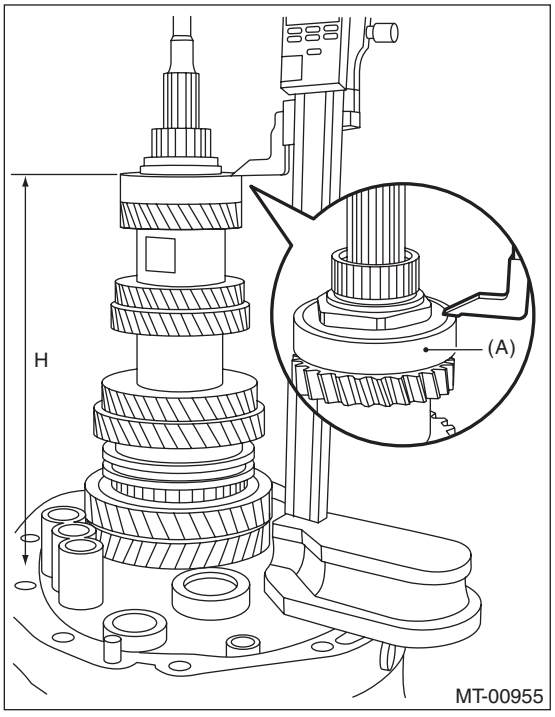

(A) Ball bearing

NOTE:
Set the height gauge indicator near the measurement target, and lock dial (1) as shown in the figure. Turn dial (2), and set the indicator to the end face of the bearing.

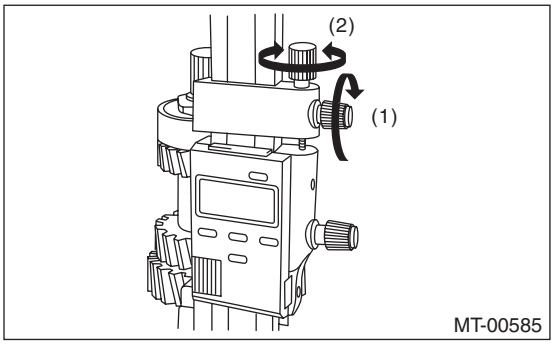

Turn approximately 120° at a time, and measure the ball bearing in 5 locations. Round off the two highest and two lowest measurement values. The remaining center value is used as the measurement value.
4) According to the measurement value, select the snap ring and washer from the following table.

Snap ring

H: mm (in)	Part No.	Thickness: mm (in)
270.83 — 271.40 (10.66 — 10.69)	805072010	1.65 (0.065)
271.41 — 271.98 (10.69 — 10.71)	805072011	1.95 (0.077)
271.99 — 272.56 (10.71 — 10.73)	805072012	2.25 (0.089)

Washer

H: mm (in)	Part No.	Thickness: mm (in)
270.83 — 271.40 (10.66 — 10.69)	803067012	1.6 (0.063)
271.41 — 271.98 (10.69 — 10.71)	803067011	1.3 (0.051)
271.99 — 272.56 (10.71 — 10.73)	803067010	1.0 (0.039)